PUBLISHED: 15-AUG-2016
2017.0 DISCOVERY (LR), 308-07

FOUR-WHEEL DRIVE SYSTEMS

HIGH/LOW RANGE SENSOR (G2003291)

REMOVAL AND INSTALLATION

41.30.07	SENSOR - POSITION - HI/LOW RATIO - RENEW	ALL DERIVATIVES	0.4	USED WITHINS

REMOVAL

NOTE:

- Some variation in the illustrations may occur, but the essential information is always correct.
- Some components shown removed for clarity.

1. Disconnect the battery ground cable.
   Refer to: Specifications (414-00, Specifications).

2. **WARNING:**

   Make sure to support the vehicle with axle stands.

   Raise and support the vehicle.

transmissionmanuals

3.

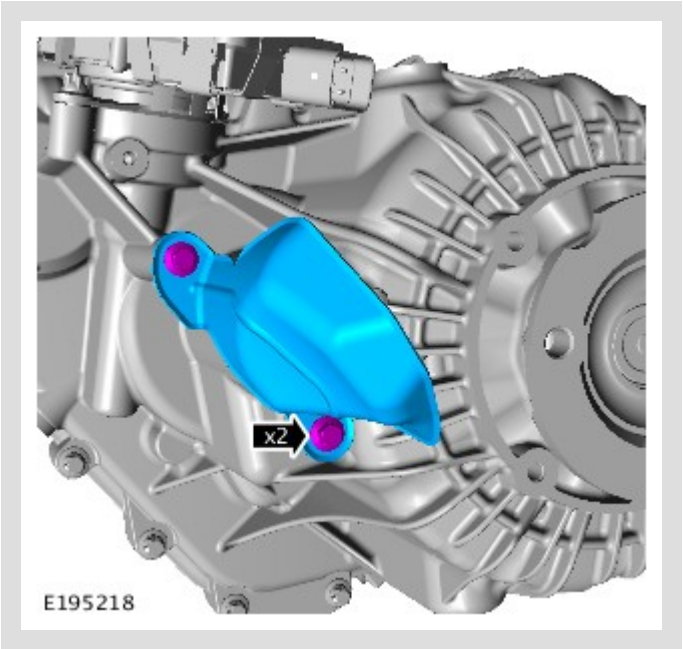

Remove the heat shield if installed.

4.

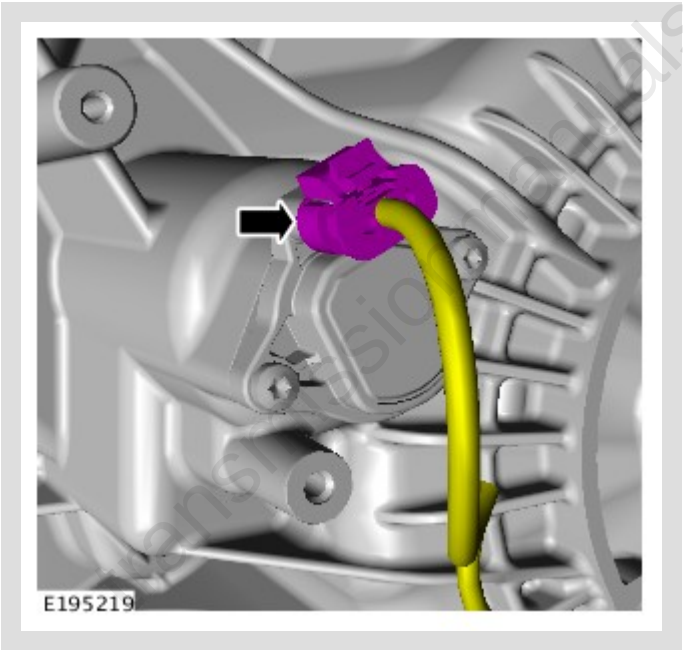

Disconnect the electrical connector.

5.

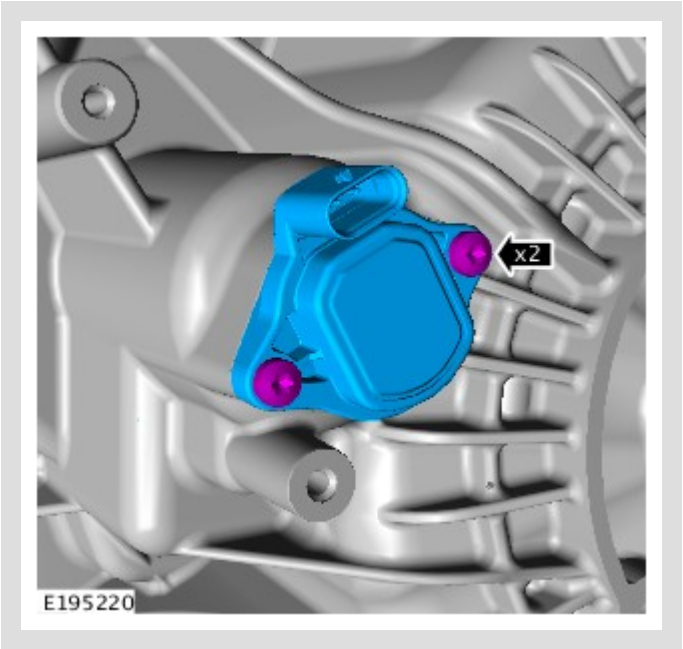

Remove the sensor.

transmissionmanuals.com

INSTALLATION

1.

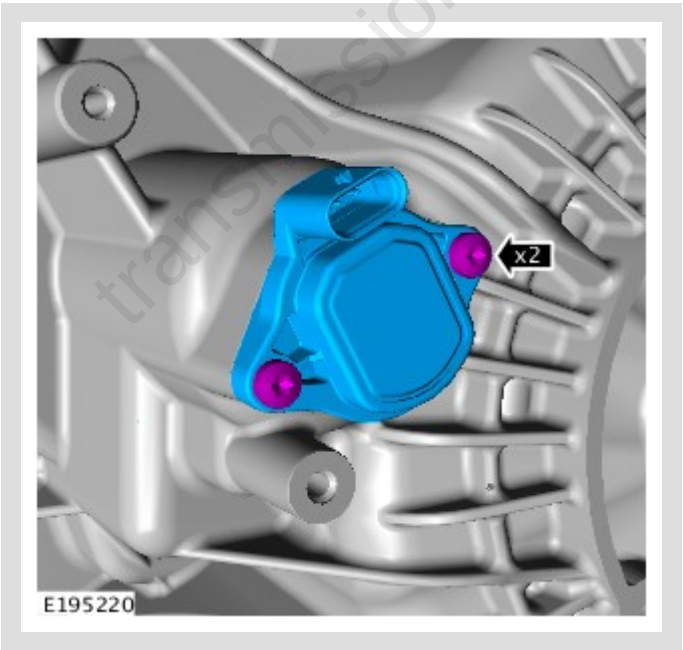

- Install the sensor.
- *Torque:* **5 Nm**

2.

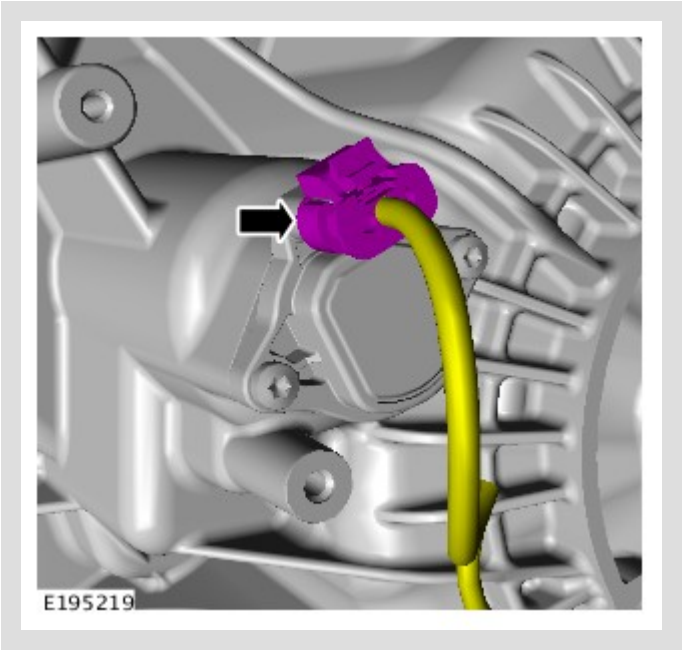

Connect the electrical connector.

3.

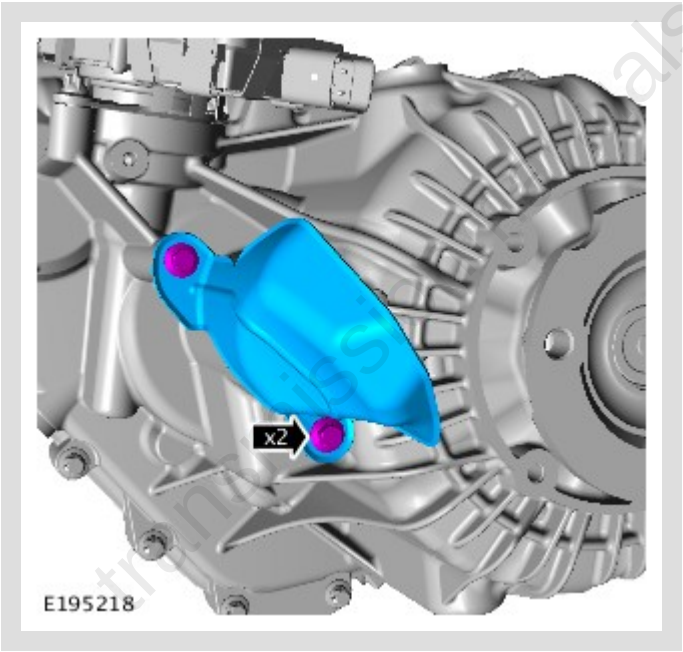

- Install the heat shield if previously removed.
- *Torque:* **8 Nm**

4.

WARNING:

Make sure to support the vehicle with axle stands.

Raise and support the vehicle.

5. Connect the battery ground cable.
Refer to: Specifications (414-00, Specifications).

6.

- Connect the Land Rover approved diagnostic equipment.
- Start the service function "transfer case-absolute position sensor replacement".
- Clear any Diagnostic Trouble Codes (DTCs) after calibration and check for correct operation.

transmissionmanuals.com